DOT. surfaces

TOGO _INT_1300

TECHNICAL INFORMATION

DESCRIPTION

·Washbasin

·Overflow: NO

·Sink plug: NO

·Interior measurements:
450x300 mm
·Exterior measurements:
500x350 mm

TECHNICAL DRAWING

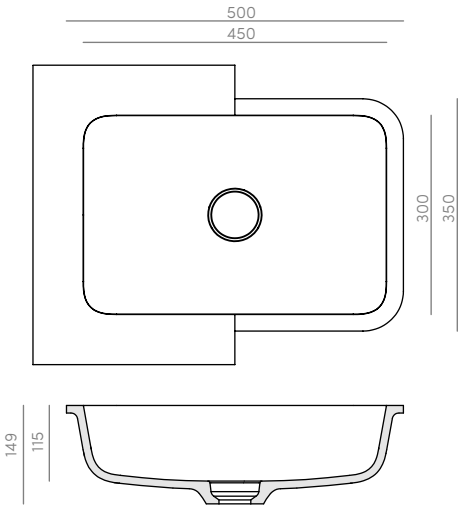

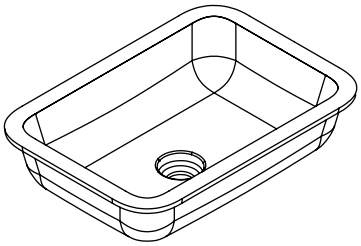

REFERENCE_INT_1300

Measurements
450x300x115 mm /

Material composition
This CORIAN® basin is a solid surface product consisting of acrylic-modified polyester resin and ATH filler. It is homogeneous through its thickness, hygienic, durable, repairable, renewable and has excellent sensorial qualities.

Finishes
Moon White

Installation
Integrated

Accesories
Valve not included

TECHNICAL SPECIFICATIONS

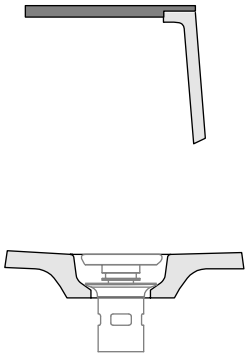

CORIAN® DESIGN

Manufactured and distributed by DOT Surfaces, a licensee of the Corian® Design trademark. DOT Surfaces assumes liability for the manufacture of this product.
For questions or concerns contact: info@dotsurfaces.com C/ Moroder 3 - 46113 Moncada (Valencia) - Spain - Quality Department (+34 961 860 930).
Corian® Design word mark and the Corian® Design logo are trademarks of affiliates of DuPont de Nemours, Inc. used under license by DOT Surfaces.